Plastic Hinges UV

Plastic Hinges Through Page 329

- include 304SS pins unless otherwise specified
- some include threaded studs and/or inserts that are either brass or nickel plated steel
- include UV stabilizers

Fastening Options

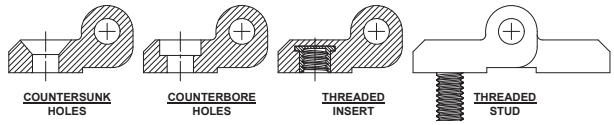

4.72 [120.0] Plastic Lift-off Hinges

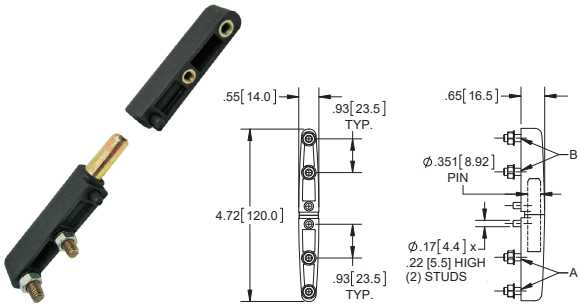

Part Number	A	B	Radial Working Load (lb)	Axial Working Load (lb)
H3526P	M5 x .47 [12.0] long threaded studs	M5 x .47 [12.0] long threaded studs	200	110
H3527P	M5 threaded inserts	M5 threaded inserts	200	110
H3528P	M5 threaded inserts	M5 x .47 [12.0] long threaded studs	200	110

- steel pin with yellow zinc plated finish
- includes mounting screws

Plastic Hinges



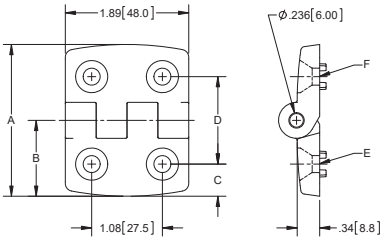

Part Number	A	B	C	D	E	F	Radial Working Load (lb)	Axial Working Load (lb)
H3518P	2.01 [51.0]	1.13 [28.6]	.41 [10.4]	1.14 [29.0]	**M4** fastener countersinks	**M4** fastener countersinks	200	150
H3520P	2.46 [67.5]	1.16 [29.5]	.49 [12.5]	1.57 [40.0]	**M4** fastener countersinks	**M6** fastener countersinks	200	150
H3521P	1.69 [43.0]	.81 [20.6]	.41 [10.4]	.95 [24.0]	**M4** fastener countersinks	**M4** fastener countersinks	200	170
H3522P	2.32 [59.0]	1.16 [29.5	.49 [12.5]	1.34 [34.0]	**M6** fastener countersinks	**M6** fastener countersinks	200	150
H3523P	2.99 [76.0]	1.50 [38.0]	.59 [15.0]	1.81 [46.0]	**M6** fastener countersinks	**M6** fastener countersinks	200	150

Plastic Hinge with Counterbores



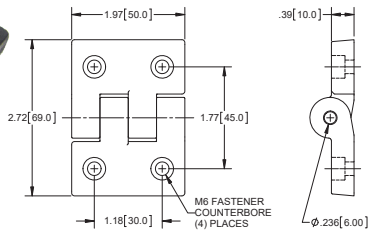

Part Number	Radial Working Load (lb)	Axial Working Load (lb)
H3504P	200	120

Plastic Hinges



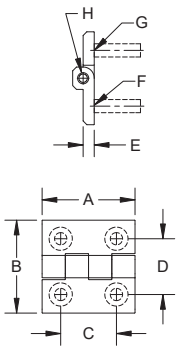

Part Number	A	B	C	D	E	F	G	H	Radial Working Load (lb)	Axial Working Load (lb)
H3500P	.98 [25.0]	.98 [25.0]	.59 [15.0]	.59 [15.0]	.12 [3.0]	**M3** fastener countersinks	**M3** fastener countersinks	Ø.118 [3.00]	50	40
H3501P	.98 [25.0]	1.18 [30.0]	.59 [15.0]	.71 [18.0]	.12 [3.0]	**M4** fastener countersinks	**M4** fastener countersinks	Ø.118 [3.00]	50	35
H3502P	1.58 [40.0]	1.58 [40.0]	.98 [25.0]	.98 [25.0]	.20 [5.0]	**M5** fastener countersinks	**M5** fastener countersinks	Ø.157 [4.00]	120	70
H3503P	1.97 [50.0]	1.97 [50.0]	1.18 [30.0]	1.18 [30.0]	.24 [6.0]	**M6** fastener countersinks	**M6** fastener countersinks	Ø.236 [6.00]	150	90
H3503P-01	1.97 [50.0]	1.97 [50.0]	1.18 [30.0]	1.18 [30.0]	.24 [6.0]	**M6** x .59 [15.0] long threaded studs	**M6** x .59 [15.0] long threaded studs	Ø.236 [6.00]	150	100