Spring Loaded Chest Handles

p/n **29SS01**

p/n **29**

Part Number	Material	Finish	Mounting
29	steel	yellow zinc plated	(2) slots
29-01	steel	yellow zinc plated	(3) holes
29-02	steel	zinc plated	(2) slots
29BK	steel	black e-paint	(2) slots
29SS01	304SS	tumbled	(3) holes

- spring loaded bail
- black rubber grip

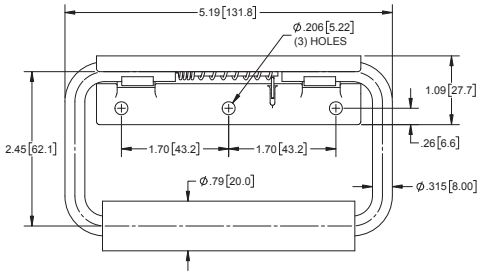

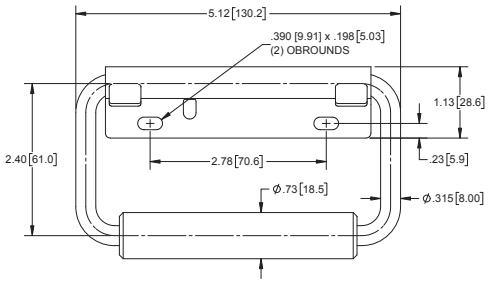

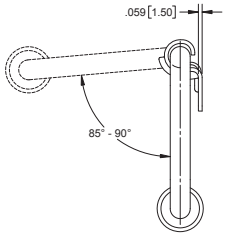

Spring Loaded Chest Handle

Part Number	Material	Finish
25ZN	steel	zinc plated

- spring loaded bail
- black rubber grip

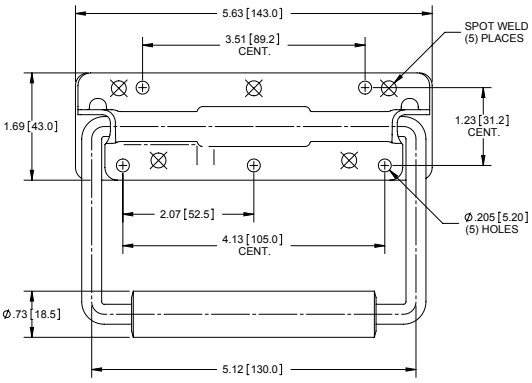

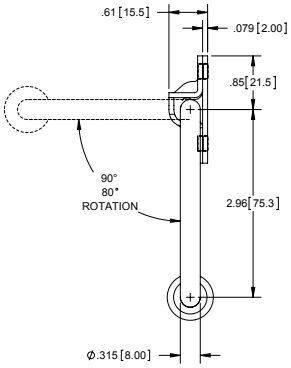

Download 3D MODELS @ www.spep.com