Blind Mount T-handles

NEMA 12 IP64

Part No.	Mount	90° Rotation	Shaft Style	Shaft Length	Key Code	Finish
360601	blind	CW	3/8" -24 thread	4.00 [101.6]	CH751	chrome
360610		CC			CH751	
360602		CW			non-locking	
360611		CC			non-locking	
360601BK		CW			CH751	matte black powder coated
360610BK		CC			CH751	
360602BK		CW			non-locking	
360611BK		CC			non-locking	

- achieve NEMA 12 and IP64 enclosure access requirements when combined with escutcheon gasket sold separately, part no. **315G**
- material: die cast zinc
- .313 [7.94] sq. shaft
- includes dust shutter
- includes:
  (2) mounting screws
  (2) ringed keys
  (1) nut

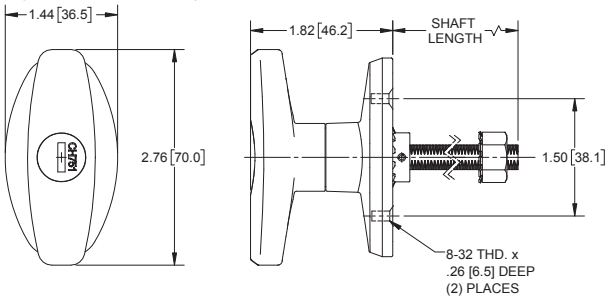

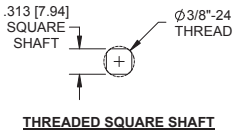

Blind Mount T-Handles

Part No.	Mount	90° Rotation	Shaft Style	Shaft Length	Key Code	Finish
3601	blind	CW	3/8" -24 thread	4.00 [101.6]	CH751	chrome
3602		CC			CH751	
360206		CC		2.50 [63.5]	CH751	brushed chrome
360207		CC			non-locking	
360203BK		CC		2.00 [50.8]	AH112	matte black
360204BK		CC			non-locking	

- material: die cast zinc
- .313 [7.94] sq. shaft
- gasket available separately as part no. **344G-01**
- includes:
  (2) mounting screws
  (2) keys

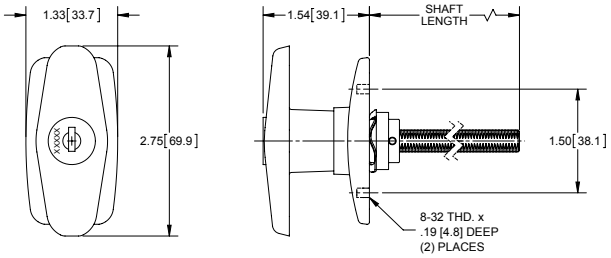

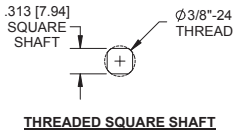

Padlocking Handle

Part Number	Escutcheon		Handle	
	Material	Finish	Material	Finish
65BK-01	die cast zinc	matte black	steel with plastic over-mold	matte black powder coated
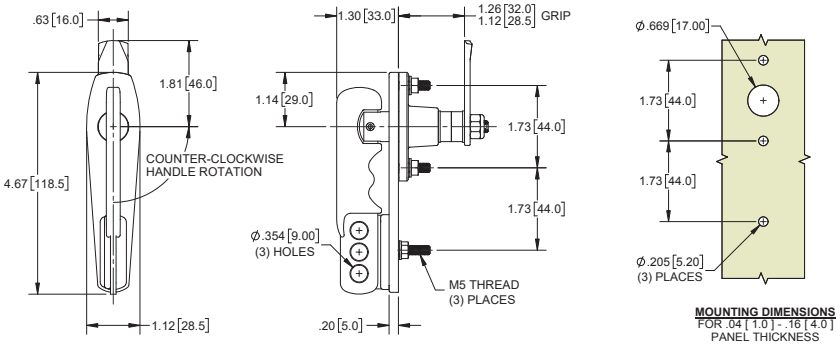
- includes cam & fasteners